OXFORD

INTERNATIONAL AQA EXAMINATIONS

Please write clearly in block capitals.

Centre number | | | | | | Candidate number | | | | |

Surname _____

Forename(s) _____

Candidate signature _____

INTERNATIONAL A-LEVEL
PHYSICS

Unit 5 Physics in practice

Monday 25 June 2018 07:00 GMT Time allowed: 2 hours

Materials

For this paper you must have:
- a Data and Formulae Booklet as a loose insert
- a ruler with millimetre measurements
- a scientific calculator, which you are expected to use where appropriate.

Instructions
- Use black ink or black ball-point pen.
- Fill in the boxes at the top of this page.
- Answer **all** questions.
- You must answer the questions in the spaces provided. Do not write outside the box around each page or on blank pages.
- All working must be shown.
- Do all rough work in this book. Cross through any work you do not want to be marked.

Information
- The marks for questions are shown in brackets.
- The maximum mark for this paper is 80.

For Examiner's Use	
Question	Mark
1	
2	
3	
4	
5	
6	
7	
TOTAL	

Do not write outside the box

Section A

Answer **all** questions in this section.

0 1 A class measures the time t for a ball to fall from rest through a distance s for a range of values of s.

Figure 1 shows the variation of t^2 with s.

Figure 1

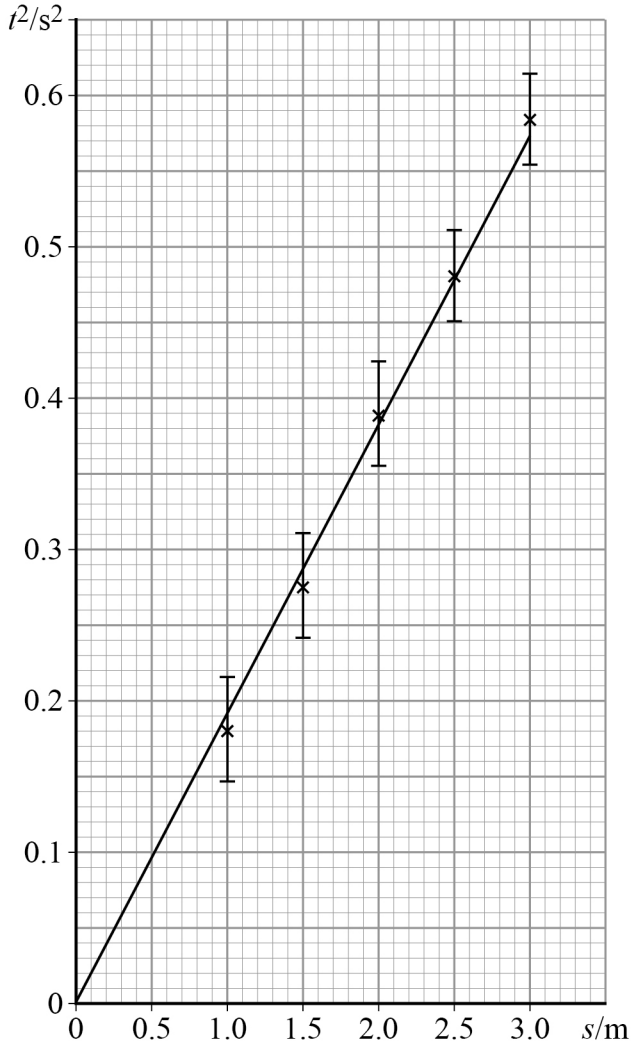

Do not write outside the box

0 1 . 1 Determine the gradient of the graph.

[2 marks]

gradient = _____ $s^2\ m^{-1}$

0 1 . 2 Calculate g using your answer to question **01.1**.

[2 marks]

g = _____ $m\ s^{-2}$

0 1 . 3 Estimate, using **Figure 1**, the uncertainty in your value for g.

[3 marks]

uncertainty in g = ± _____ $m\ s^{-2}$

7

Turn over ►

Do not write outside the box

0 2 . 1 An experiment was performed to measure the resistivity of a sample of the alloy nichrome. A student used a metre ruler to measure the length L of a wire made from nichrome. Her value for L was 521 ± 2 mm.

Calculate the percentage uncertainty in the measurement of L.

[1 mark]

percentage uncertainty in L = ± _____

0 2 . 2 The student then measured the diameter d of the wire using a micrometer. Her readings are recorded in **Table 1**.

Table 1

d / mm	0.19	0.21	0.20	0.19	0.20

The student took five measurements at different points along the wire.

Explain why.

[1 mark]

_____

_____

_____

0 2 . 3 Calculate the mean value of d and the absolute uncertainty in the measurement of d.

[2 marks]

mean value = _____ mm

absolute uncertainty = ± _____ mm

Do not write outside the box

0 2 . 4 Calculate the cross-sectional area A of the wire and its percentage uncertainty.

[3 marks]

A = _____ m^2

percentage uncertainty in A = ± _____

0 2 . 5 The student used a resistance meter to determine the resistance of the wire and found it to be $18.8\ \Omega$ with an uncertainty of 1.5%

Calculate the resistivity of nichrome and the absolute uncertainty in your value of resistivity.

[3 marks]

resistivity of nichrome = _____ Ω m

absolute uncertainty in resistivity = ± _____ Ω m

Question 2 continues on the next page

Do not write outside the box

0 2 . 6 A second student does a similar experiment with a nichrome wire of the same length but with twice the diameter.

Explain how this affects the uncertainty in the value of the resistivity of nichrome.

Assume the absolute uncertainty in the diameter and the absolute uncertainty in the resistance do not change.

[3 marks]

13

Do not write outside the box

0 3 A burette is used to measure the volume of liquids.
A student investigated how the height h of water flowing out of a burette varied with time t.

Figure 2 shows the apparatus the student used.

Figure 2

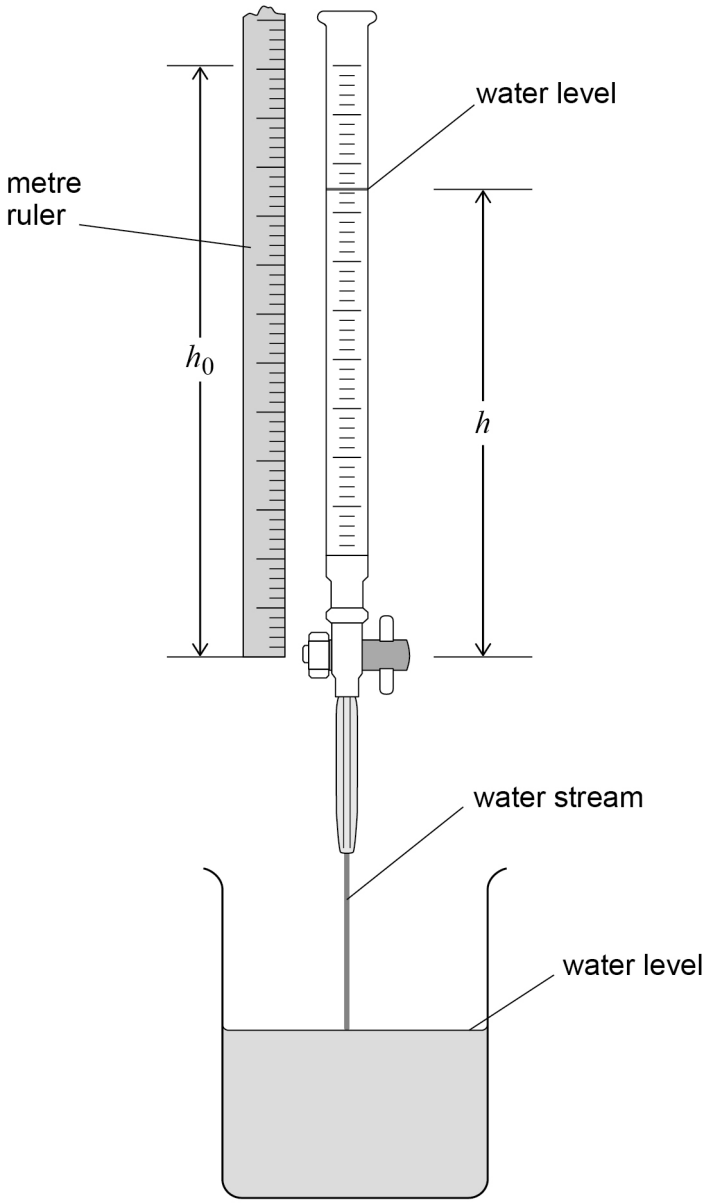

Question 3 continues on the next page

Do not write outside the box

The height of the water level above the burette tap at time $t = 0$ is h_0.

The student recorded h at $10\ \mathrm{s}$ intervals as the water drained into the beaker. The student repeated the procedure.

Table 2 shows the mean value of h for each value of t.

Table 2

t/s	mean height h/mm	ln(h/mm)
0	665	
10	572	
20	513	
30	428	
40	381	
50	336	

0 3 . 1 Complete **Table 2**.

[1 mark]

0 3 . 2 Plot on **Figure 3** a graph of $\ln(h/\mathrm{mm})$ against t/s.

[4 marks]

0 3 . 3 Determine the gradient of your line.

[2 marks]

gradient = _____

Do not write outside the box

Figure 3

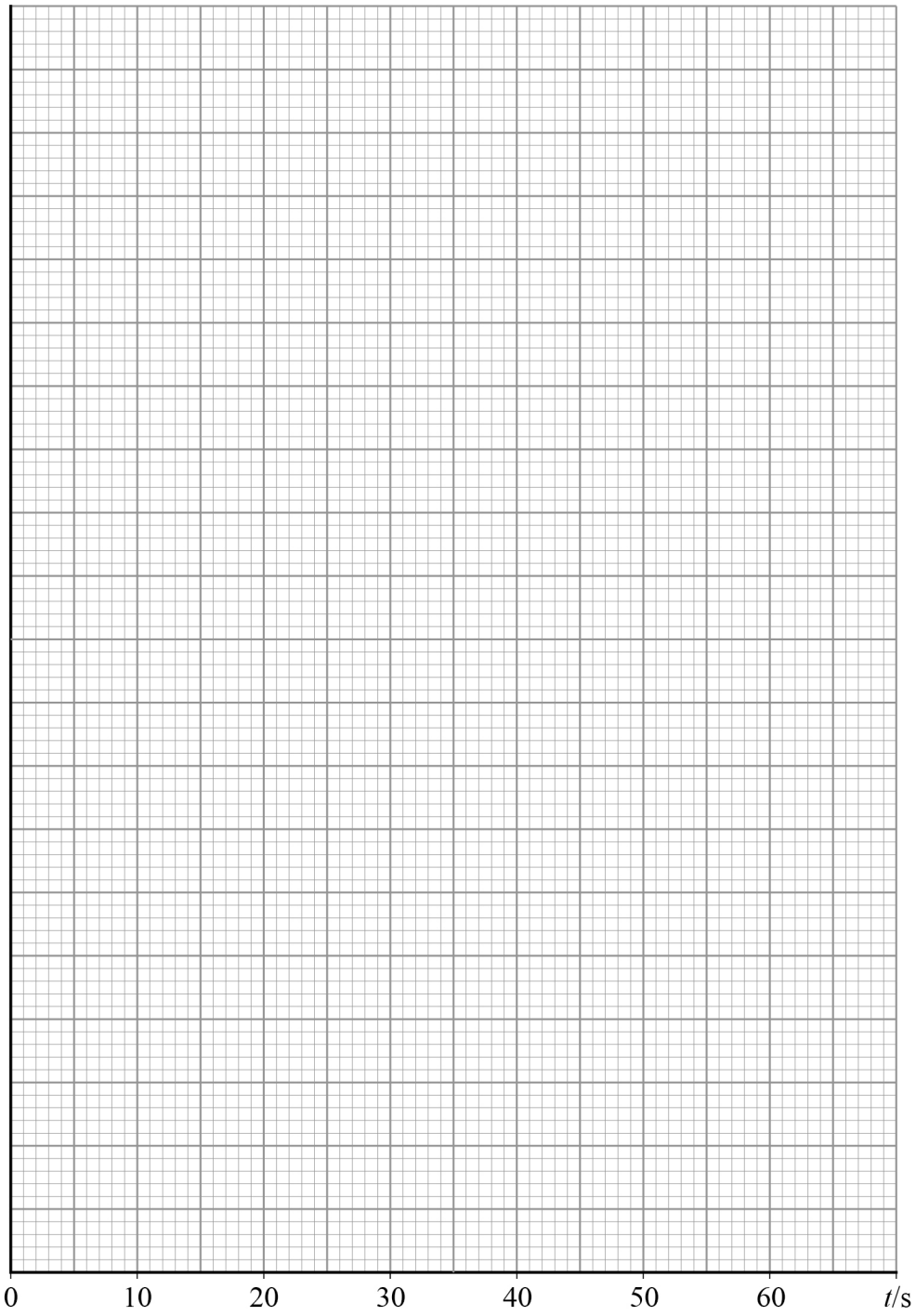

Question 3 continues on the next page

Do not write outside the box

0 3 . 4 Theory predicts that the relationship between h and t is

$$h = h_0 \, e^{-\lambda t}$$

where h_0 is the height of the water level at $t = 0$

State a value for λ.
Give an appropriate unit for λ.

[2 marks]

λ = _____

unit for λ = _____

0 3 . 5 Suggest a possible source of systematic error in the student's experiment.

[1 mark]

_____

0 3 . 6 Explain whether the systematic error mentioned in your answer to question **03.5** would have affected the value you determined for λ.

[1 mark]

_____

_____

_____

_____

_____

11

Do not write outside the box

Turn over for the next question

DO NOT WRITE ON THIS PAGE
ANSWER IN THE SPACES PROVIDED

Do not write outside the box

0 4 A metre ruler with a mass attached to the free end is clamped to the edge of a bench as shown in **Figure 4**. The ruler oscillates when the mass is displaced vertically through a small distance and released.

Figure 4

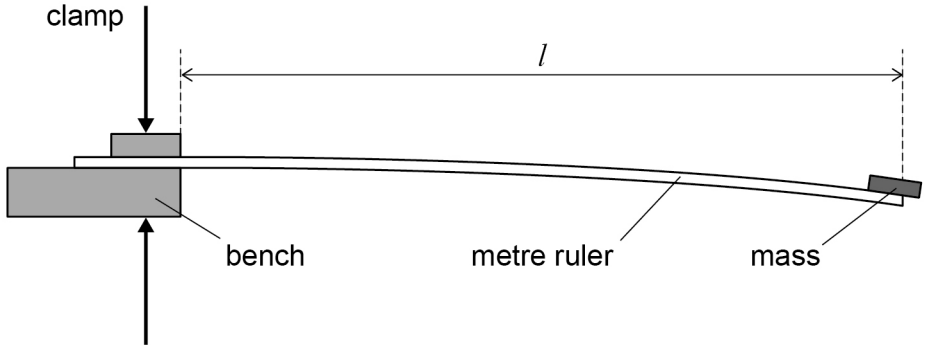

Theory predicts that the period of oscillation T of the system varies with length l according to the equation

$$T^2 = kl^3$$

where k is a constant.

Describe the procedure you would use to verify the equation. You may suggest the use of the apparatus in **Figure 4** together with other standard laboratory equipment.

Your answer should include details of:

- the measurements to be made
- the measuring instruments that you would use
- how you would make the measurements accurately
- how you would analyse and interpret the results.

[5 marks]

Do not write outside the box

END OF SECTION A

5

Turn over ►

Do not write outside the box

Section B

Answer **all** questions in this section.

0 5 **Figure 5** shows an electrostatic precipitator that is designed to remove small dust particles from the dirty air in a factory.
The dirty air passes through a charged, ionising grid where the dust particles acquire a charge.
The dust particles, which are electrical conductors, are attracted to collecting plates, removing them from the air. The clean air passes back to the factory. The electrostatic precipitator is cleaned regularly to remove the dust particles that have accumulated on the collecting plates. The dust particles move horizontally as they enter a channel between the plates.

Figure 5

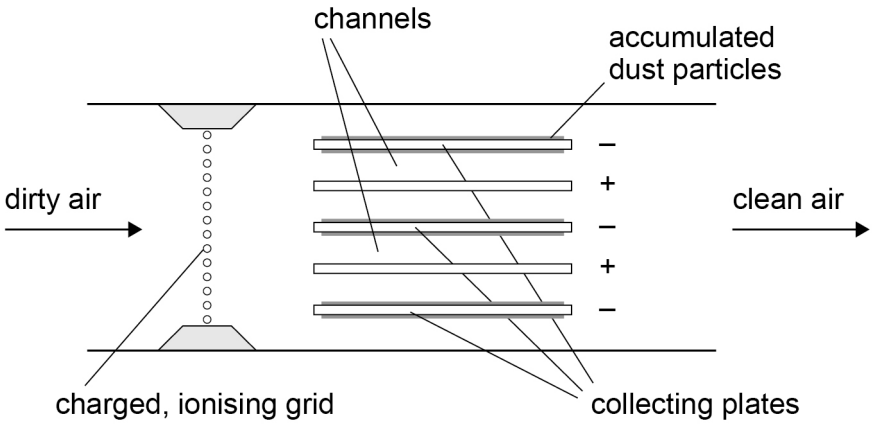

0 5 . 1 Explain how the dust particles gain a positive charge as they pass through the charged, ionising grid.

[1 mark]

_____

_____

_____

Do not write outside the box

0 5 . 2 **Figure 6** shows one of the channels between a pair of adjacent clean plates.
A dust particle of mass 5.6×10^{-15} kg enters the region between the collecting plates travelling horizontally with an initial velocity of 10 m s^{-1}. The particle carries a charge of 2.4×10^{-18} C.

Figure 6

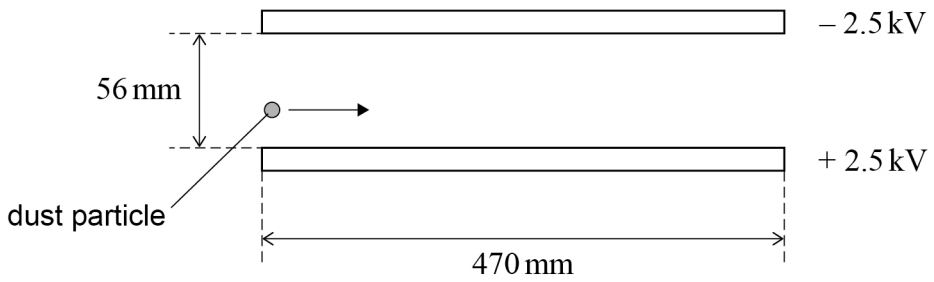

Show that the electrostatic force acting on the particle is approximately 2×10^{-13} N.

[2 marks]

0 5 . 3 Some particles pass through the channel without hitting a collecting plate.

Show that these particles spend approximately 0.05 s between the plates.

[1 mark]

Question 5 continues on the next page

Do not write outside the box

0 5 . 4 Deduce whether all 5.6×10^{-15} kg particles with a charge of 2.4×10^{-18} C and an initial velocity of 10 m s^{-1} are likely to reach a negatively charged plate as they pass through a channel.

Assume that the particles are unaffected by gravity and that such dust particles have not yet accumulated on the collecting plates. All adjacent plates have the same potential difference between them.

[4 marks]

Are all such dust particles likely to reach a collecting plate? _____

0 5 . 5 The particles gradually accumulate on the collecting plates as shown in **Figure 5**. This causes the channel to become narrower by up to 5 mm before the precipitator is cleaned.

Discuss whether the narrowing of the channels will make the precipitator more or less effective at removing dust particles.

[3 marks]

_____

_____

_____

_____

_____

_____

_____

_____

11

Do not write outside the box

Turn over for the next question

DO NOT WRITE ON THIS PAGE
ANSWER IN THE SPACES PROVIDED

Do not write outside the box

0 6 **Figure 7** shows a steam turbine being used to drive a generator. Steam at high temperature and pressure enters the turbine causing fan blades to rotate. The steam expands and cools in the turbine so that 90% of it condenses. The remaining steam is at a lower temperature and pressure.

The data for the turbine and generator are:

steam inlet temperature	=	500 °C
steam inlet pressure	=	100 MPa
rate of supply of steam	=	16 kg s^{-1}
output power of the turbine	=	16 MW
frequency of rotation of generator	=	3000 revolutions per minute

Figure 7

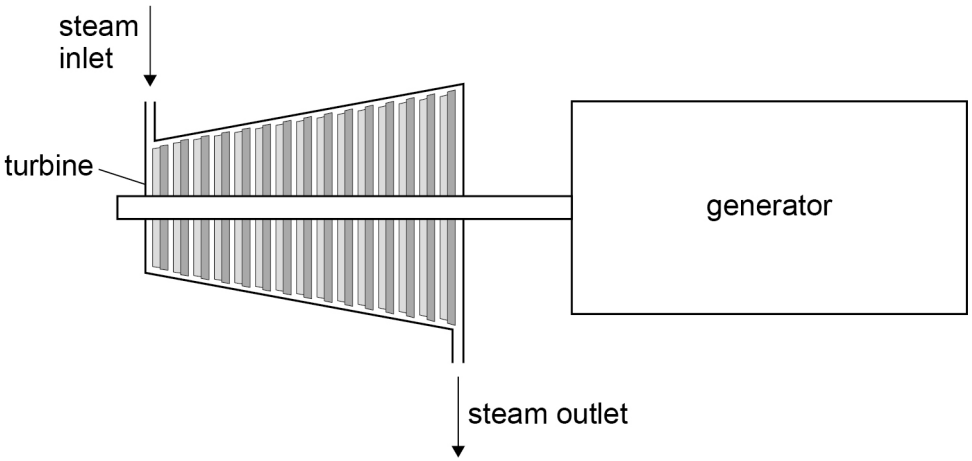

0 6 . 1 Calculate the mean molecular kinetic energy of the steam as it enters the turbine. Assume that the steam behaves as an ideal gas.

[3 marks]

mean molecular kinetic energy = _____ J

Do not write outside the box

0 6 . 2 The mass of one mole of steam is 18 g.

Calculate the total molecular kinetic energy of the steam entering the turbine in one second.

[2 marks]

total molecular kinetic energy = _____ J

0 6 . 3 Explain why the steam entering the turbine does **not** behave as an ideal gas.

[1 mark]

_____

_____

_____

0 6 . 4 The work output of the turbine in one second is significantly greater than the total molecular kinetic energy of the steam entering the turbine in one second.

Explain where the additional energy comes from.

[2 marks]

_____

_____

_____

_____

_____

Question 6 continues on the next page

Do not write outside the box

0 6 . 5 Calculate the torque exerted by the turbine on the generator.

[3 marks]

torque = _____ N m

0 6 . 6 The input power to the generator is 16 MW and the generator is 90% efficient.
The generator has three coils, each producing an equal power output.
The rms voltage across each coil is 8500 V.

Calculate the rms current in one of the coils.

[3 marks]

rms current = _____ A

Do not write outside the box

0 6 . 7 Explain, in terms of electromagnetic induction, why a torque is required to turn the generator at a constant angular velocity.

[4 marks]

18

Turn over for the next question

Do not write outside the box

0 7 The transducer shown in **Figure 8** produces pulses of ultrasound. When an alternating current is passed through it, the piezoelectric crystal oscillates with the same frequency as the alternating current. This crystal resonates at a frequency of 2.0 MHz.

A damping material behind the crystal stops the oscillations at the end of a pulse.

Figure 8

0 7 . 1 Describe what is meant by resonance.

[2 marks]

0 7 . 2 Sketch a graph to show how the amplitude of oscillation of the crystal varies with frequency over a range of 0 to 4 MHz.

[2 marks]

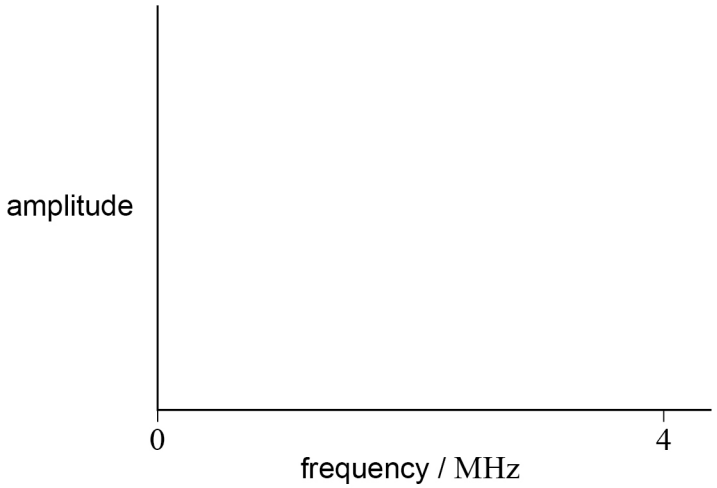

0 7 . 3 State what is meant by damping.

[1 mark]

Do not write outside the box

0 7 . 4 Ultrasound is used to image tissues in a patient's body. When an incident pulse hits a tissue boundary, some energy is reflected and some is transmitted, as shown in **Figure 9**.

Figure 9

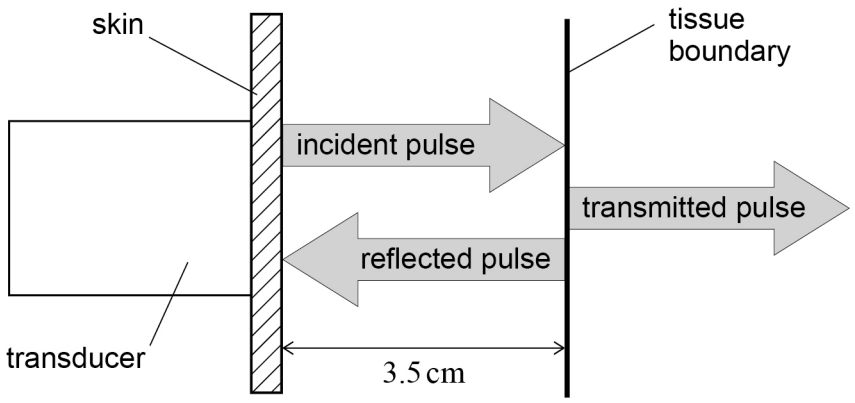

The reflected pulse is received by the transducer.

Ultrasound is emitted in short pulses so that the reflected pulse arrives at the transducer after the crystal has stopped vibrating.

The speed of the ultrasound c in the patient is

$$c = \sqrt{\frac{\text{elastic modulus}}{\text{tissue density}}}$$

In this case:
elastic modulus = 1.45×10^9 Pa
tissue density = $1080\ \text{kg m}^{-3}$
tissue width = 3.5 cm

Deduce the maximum duration of the incident pulse that will allow the reflected pulse to arrive at a non-vibrating crystal.

[3 marks]

duration of incident pulse = _____ s

Question 7 continues on the next page

Do not write outside the box

0 7 . 5 The intensity of a pulse decreases as it travels through tissue.

$$I_x = I_0 e^{-\alpha x}$$

Where I_0 = initial intensity of pulse
I_x = intensity of pulse after travelling through x cm of tissue
α = absorption coefficient for this tissue = $1.2\ \text{cm}^{-1}$

In this case, only 34% of the pulse intensity is reflected at the tissue boundary 3.5 cm below the skin.

Determine $\frac{I_x}{I_0}$ for the ultrasound received by the transducer.

[4 marks]

$\frac{I_x}{I_0}$ = _____

0 7 . 6 The absorption coefficient for a tissue is approximately proportional to the frequency of the ultrasound in the tissue. It is common to use ultrasound of frequency 2 MHz with adult patients but a frequency of 7 MHz with young children.

Suggest why.

[3 marks]

_____

_____

_____

_____

_____

_____

15

END OF QUESTIONS

Copyright information

Copyright © 2018 Oxford International AQA Examinations and its licensors. All rights reserved.